HD Theater 500 и 300

Руководство пользователя

English

IMPORTANT SAFETY INSTRUCTIONS

1. READ these instructions.
2. KEEP these instructions.
3. HEED all warnings.
4. FOLLOW all instructions.
5. DO NOT use this apparatus near water.
6. CLEAN ONLY with dry cloth.
7. DO NOT block any ventilation openings. Install in accordance with the manufacturer's instructions.
8. DO NOT install near any heat sources such as radiators, heat registers, stoves, or other apparatus (including amplifiers) that produce heat.
9. DO NOT defeat the safety purpose of the polarized or grounding type plug. A polarized plug has two blades with one wider than the other. A grounding type plug has two blades and a third grounding prong. The wider blade or the third prong are provided for your safety. If the provided plug does not fit into your outlet, consult an electrician for replacement of the obsolete outlet.
10. PROTECT the power cord from being walked on or pinched, particularly at plugs, convenience receptacles, and the point where they exit from the apparatus.
11. ONLY use attachments/accessories specified by the manufacturer.
12. USE only with a cart, stand, tripod, bracket, or table specified by the manufacturer, or sold with the apparatus. When a cart is used, use caution when moving the cart/apparatus combination to avoid injury from tip-over.
13. UNPLUG this apparatus during lightning storms or when unused for long periods of time.
14. REFER all servicing to qualified service personnel. Servicing is required when the apparatus has been damaged in any way, such as power-supply cord or plug is damaged, liquid has been spilled or objects have fallen into the apparatus, the apparatus has been exposed to rain or moisture, does not operate normally, or has dropped.
15. OBJECTS that have been dropped or liquid has been spilled within the enclosure should not be exposed to rain or moisture.
16. DO NOT expose this apparatus to dripping or splashing and ensure that no objects filled with liquids, such as vases, are placed on the apparatus.
17. To completely disconnect this apparatus from the AC Mains, disconnect the power supply cord plug from the AC receptacle.
18. The mains plug of the power supply cord shall remain readily operable.
19. DO NOT obstruct the apparatus ventilation. Install in accordance with the manufacturer's instructions.
20. DO NOT place any sources of naked flames, such as lighted candles, on the apparatus.
21. DO NOT place any heat sources such as electrical heaters, radiators, ovens, stoves, or other apparatus (including amplifiers) that produce heat on the apparatus.
22. The apparatus shall not be exposed to dripping or splashing and no objects filled with liquids, such as vases, shall be placed on the apparatus.
23. DANGEROUS voltage inside. Disconnect all cables before moving or opening cover.
24. CAUTION: Danger of explosion if battery is incorrectly replaced. Replace only with the same or equivalent type recommended by the manufacturer. Dispose of used batteries according to the manufacturer's instructions.
25. CAUTION: To reduce the risk of fire or electrical shock, do not expose this apparatus to rain or moisture.
26. CAUTION: To prevent electric shock, match wide blade of plug to wide slot, fully insert.
27. ATTENTION: Pour réduire le risque d'incendie ou de choc électrique, introduire la fiche jusqu'au fond.
28. CAUTION: Use only the mounting device specified by the manufacturer.
29. CAUTION: Do not remove screws. No user serviceable parts inside. Refer all servicing to qualified service personnel.
30. CAUTION: Do not open! Risk of electrical shock. Only authorized Klipsch service personnel may open the unit.
31. WARNING: To reduce the risk of fire or electrical shock, do not expose this apparatus to rain or moisture.
32. WARNING: No naked flame sources – such as candles – should be placed on the product.
33. WARNING: Excessive sound pressure from earpieces and headphones can cause hearing loss.
34. AVERTISSEMENT : Pour réduire le risque d'incendie et de électrocution, ne pas exposer cet appareil à la pluie et à l'humidité.
35. AVERTISSEMENT : Ne pas exposer cet appareil à l'eau et aux éclaboussures et ne placer aucun conteneur de liquide sur cette décharge.
36. AVERTISSEMENT : Ne pas ouvrirlire ou les cabinets fermés en raison du risque d'électrocution. Toute réparation doit être effectuée par du personnel qualifié.
37. AVERTISSEMENT : Pour éviter le risque d'incendie et de choc électrique, ne pas exposer cet appareil à la pluie ou à l'humidité.
38. AVERTISSEMENT : Ne pas exposer cet appareil à l'eau et aux éclaboussures et ne placer aucun conteneur de liquide sur cette décharge.
39. AVERTISSEMENT : Pour réduire le risque d'incendie ou de choc électrique, ne pas exposer cet appareil à la pluie ou à l'humidité.
40. AVERTISSEMENT : Ne pas ouvrir! Risque d'électrocution. Seul le personnel de service autorisé peut ouvrir l'appareil.
41. AVERTISSEMENT : Pour éviter le risque d'incendie ou de choc électrique, ne pas exposer cet appareil à la pluie ou à l'humidité.
42. AVERTISSEMENT : Ne pas ouvrir! Risque d'électrocution. Seul le personnel de service autorisé peut ouvrir l'appareil.
43. AVERTISSEMENT : Ne pas ouvrir! Risque d'électrocution. Seul le personnel de service autorisé peut ouvrir l'appareil.
44. AVERTISSEMENT : Ne pas ouvrir! Risque d'électrocution. Seul le personnel de service autorisé peut ouvrir l'appareil.

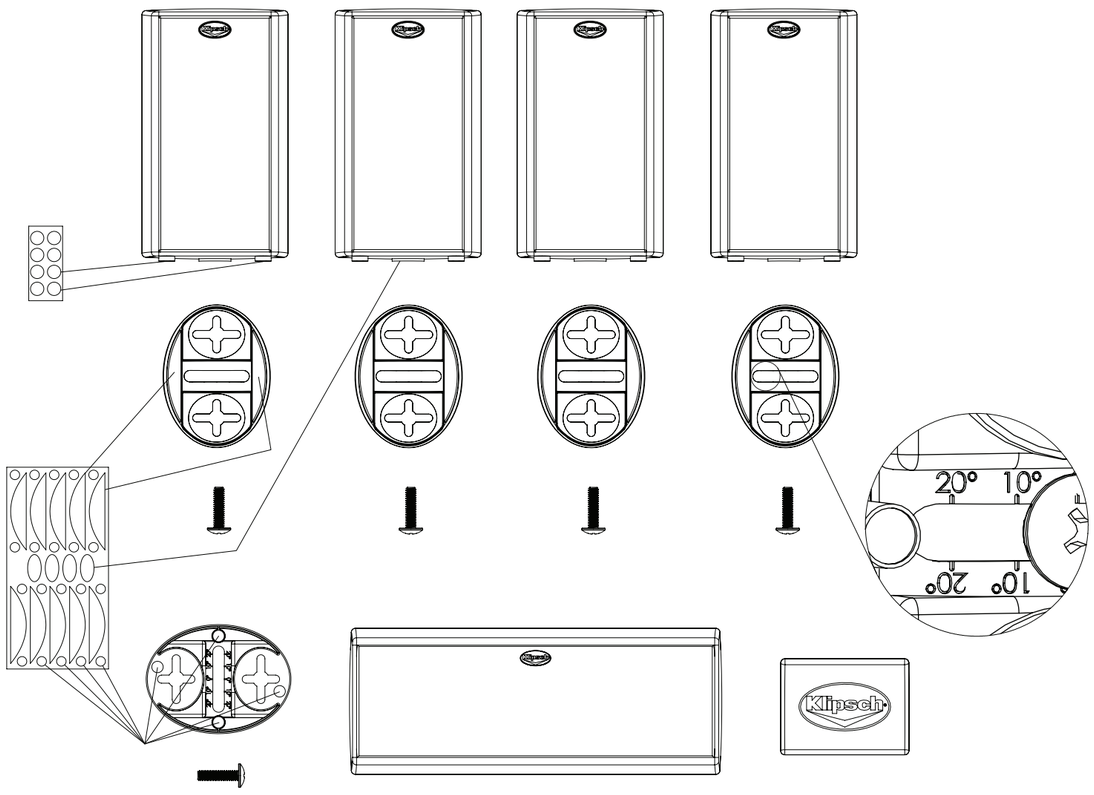

Шаблон для монтажа

Modèle de montage

Montage-Vorlage

Montaggio Template

Modelo de montagem

Plantilla de montaje
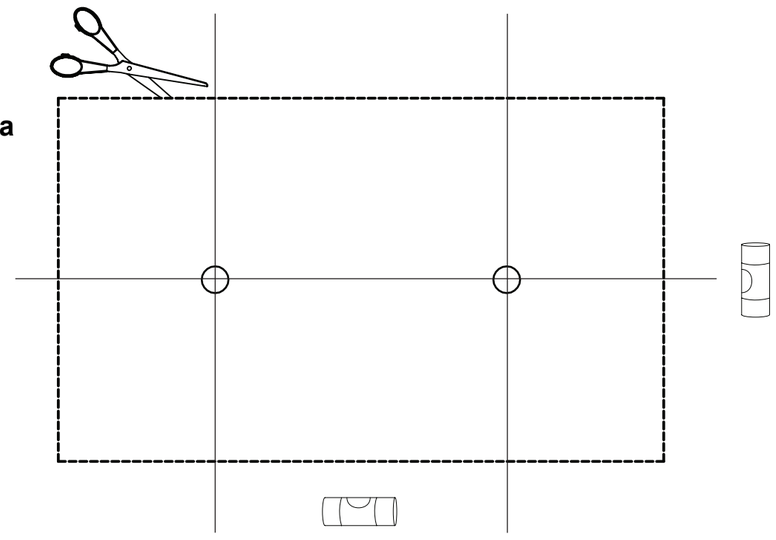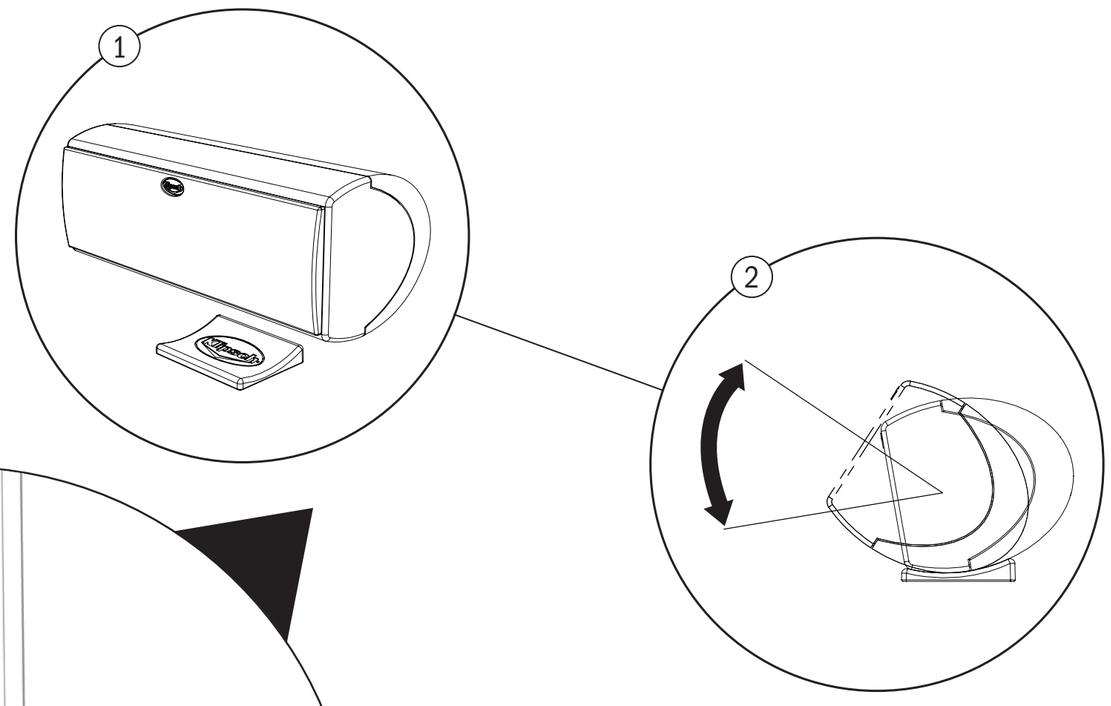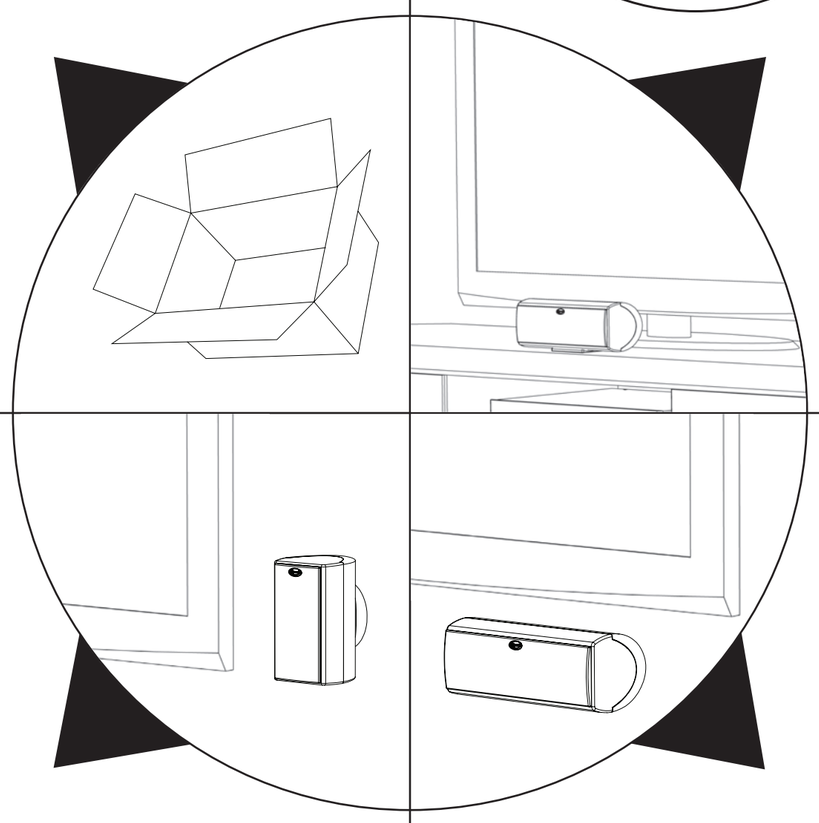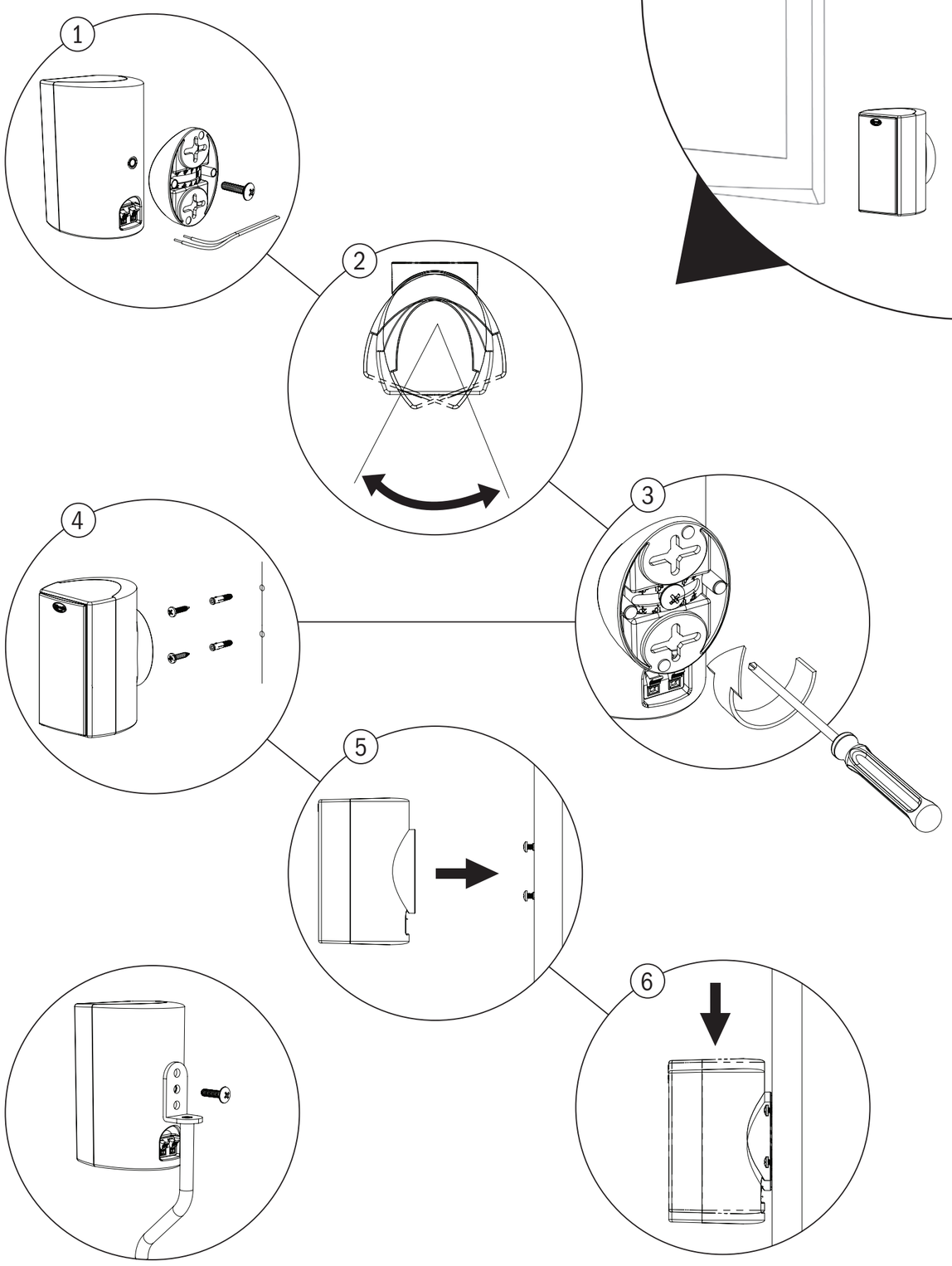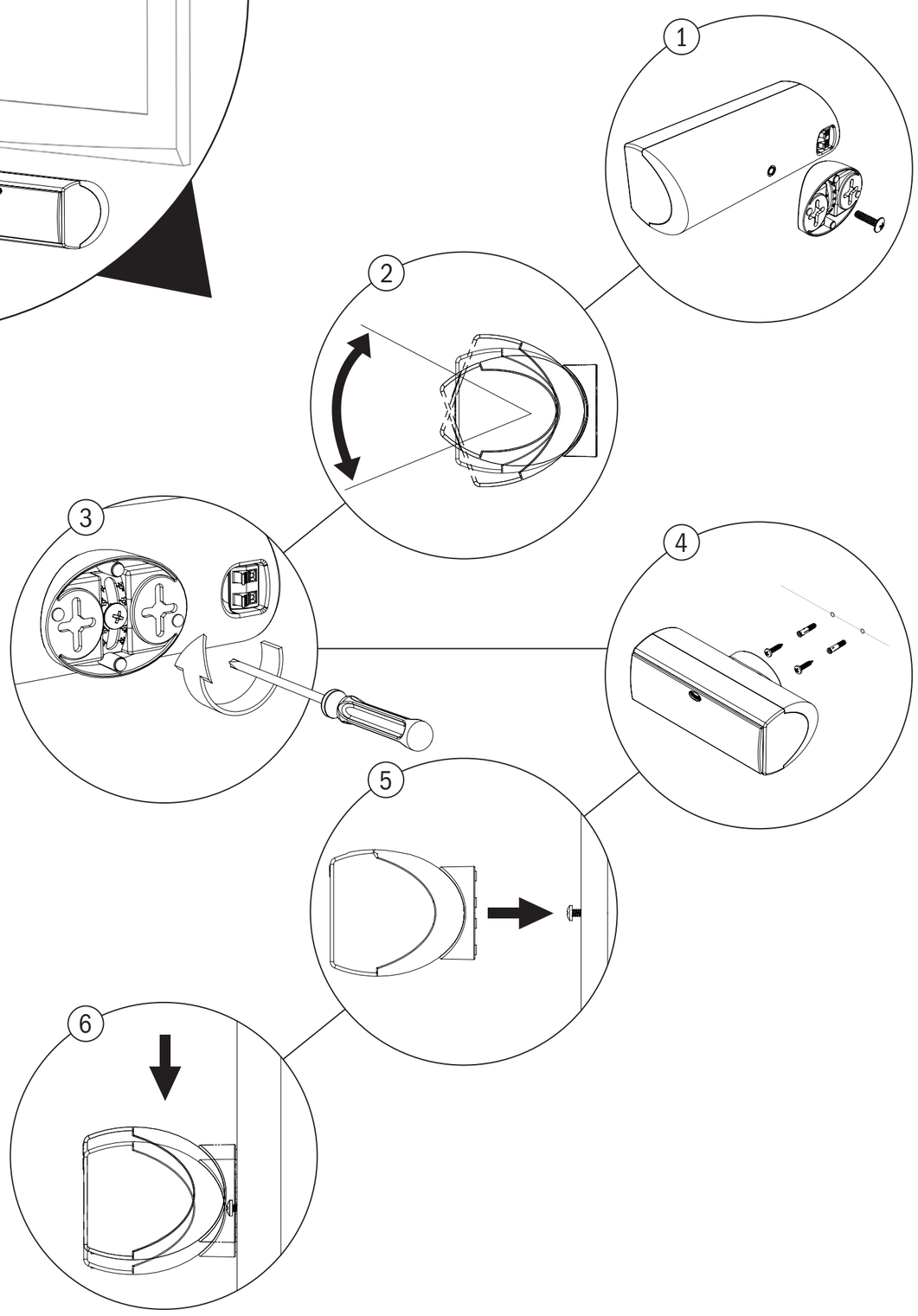
安装模板