YMR-KM-001
Стойка для клавишных

K&M KÖNIG & MEYER
Stands For Music

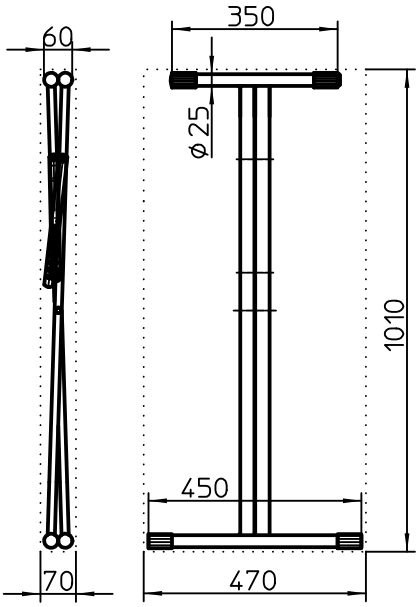

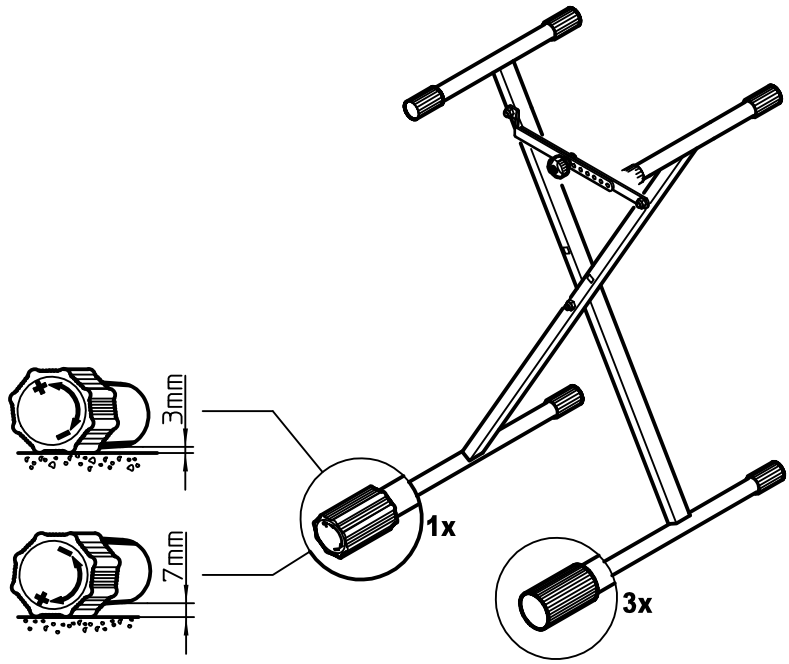

A

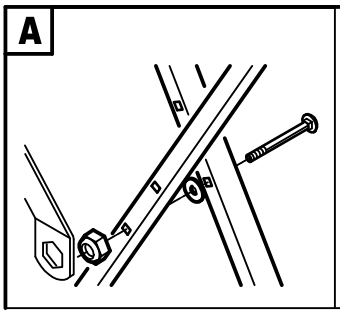

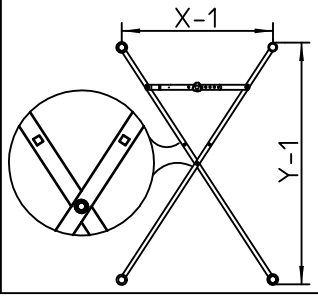

X-1		Y-1		
760	+	640	=	1-1
715	+	695	=	2-2
670	+	745	=	3-3
625	+	785	=	4-4
580	+	820	=	5-5
535	+	850	=	6-6
490	+	875	=	7-7
440	+	905	=	8-8

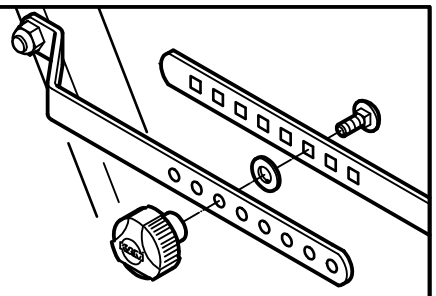

B

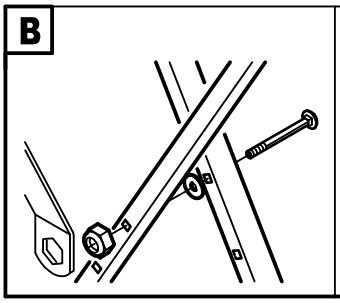

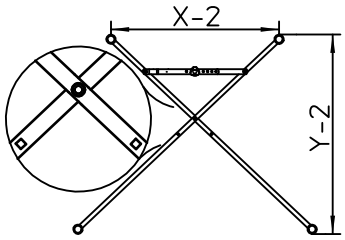
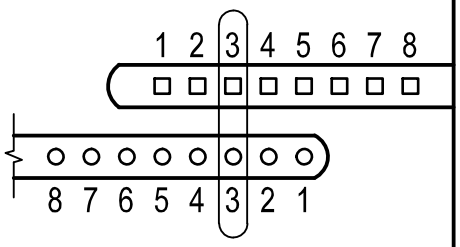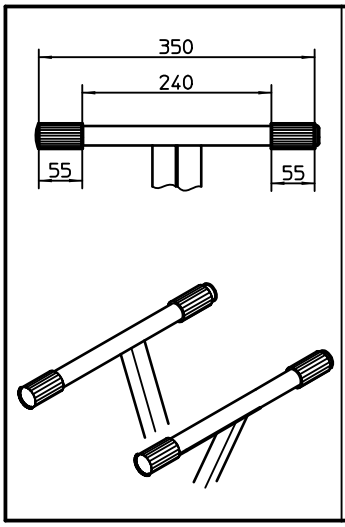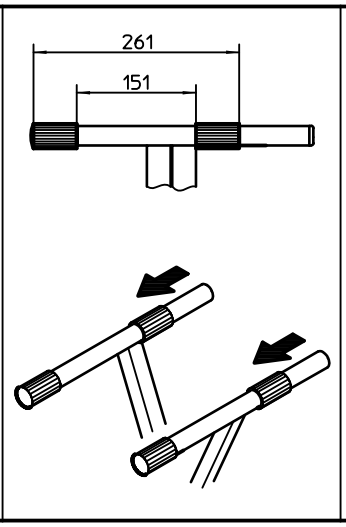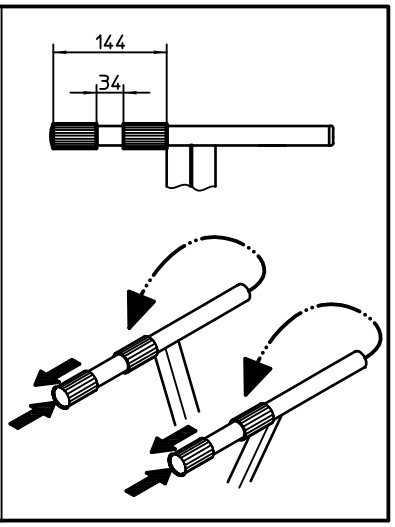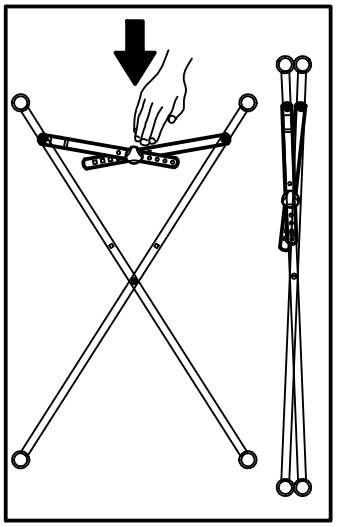
X-2		Y-2		
-		-	=	1-1
-		-	=	2-2
750	+	420	=	3-3
700	+	540	=	4-4
645	+	625	=	5-5
595	+	700	=	6-6
545	+	760	=	7-7
490	+	810	=	8-8